Round 4 - Sunday, April 26, 2026

SHOTLINK

94 Abierto del Centro Zurich presentado por Personal

Cordoba Golf Club

1 — Green Depth **26**

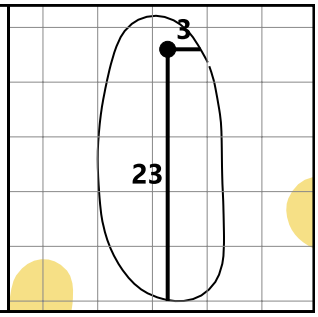

2 — Green Depth **24**

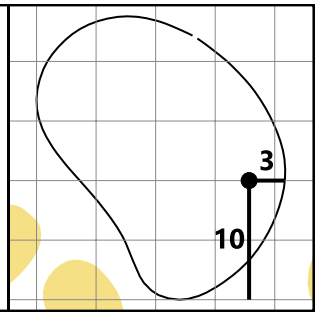

3 — Green Depth **29**

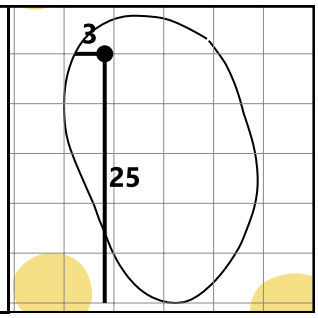

4 — Green Depth **28**

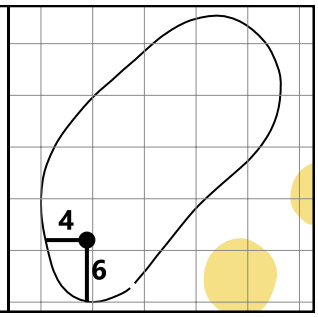

5 — Green Depth **24**

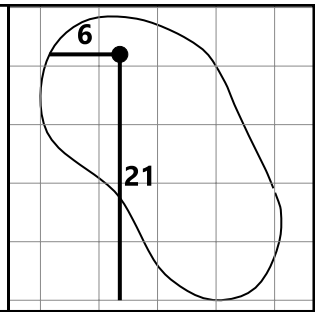

6 — Green Depth **25**

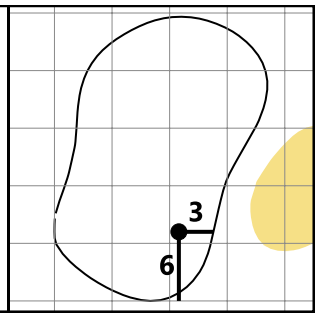

7 — Green Depth **17**

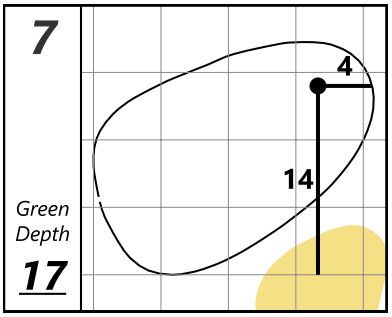

8 — Green Depth **22**

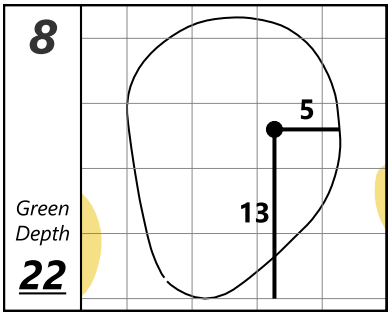

9 — Green Depth **35**

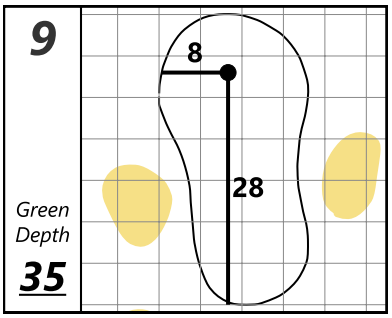

10 — Green Depth **21**

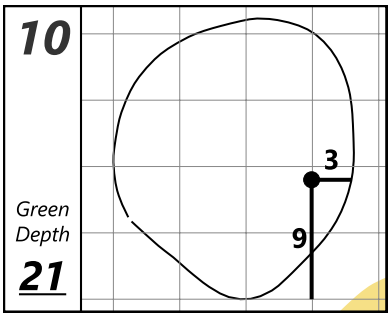

11 — Green Depth **23**

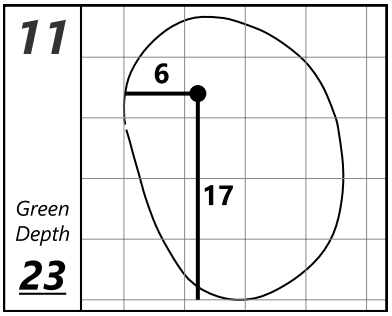

12 — Green Depth **42**

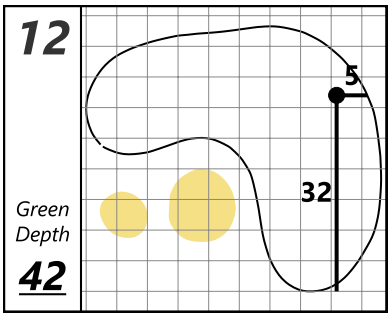

13 — Green Depth **25**

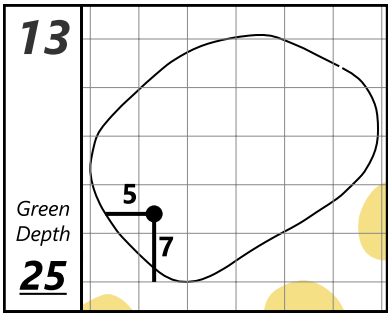

14 — Green Depth **26**

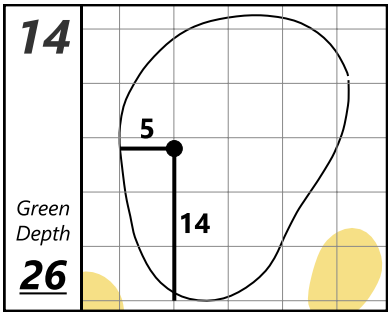

15 — Green Depth **26**

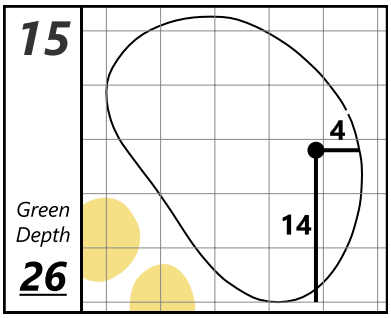

16 — Green Depth **45**

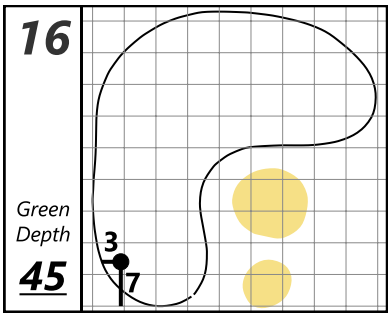

17 — Green Depth **29**

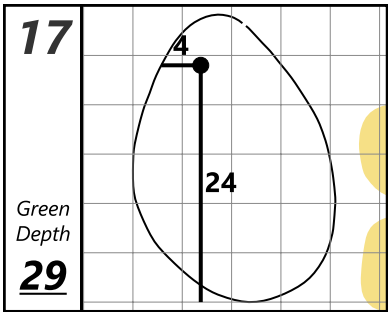

18 — Green Depth **25**

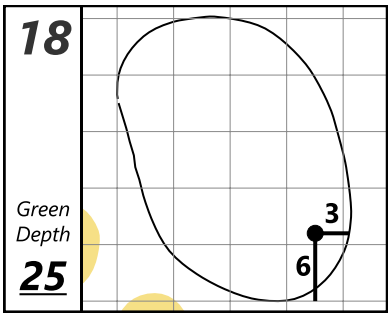

Each side of a complete square on the green represents 5 YARDS

Saturday, April 25, 2026 11:42 AM